2023 International Conference on Emerging Smart Computing and Informatics (ESCI)
AISSMS Institute of Information Technology, Pune, India. Mar 1-3, 2023

Design of Smart Pet Food Dispenser using Embedded System

Ekta Jain
Department of Electronics & Telecommunication Engineering
G H Raisoni College of Engineering
Nagpur, India
jain_ekta.et@ghrce.raisoni.net

Sakshi Badwaik
Department of Electronics & Telecommunication Engineering
G H Raisoni College of Engineering
Nagpur, India
badwaik_sakshi.et@ghrce.raisoni.net

Sampada Khirwadkar
Department of Electronics & Telecommunication Engineering
G H Raisoni College of Engineering
Nagpur, India
khirwadkar_sampada.et@ghrce.raisoni.net

Shruti Thakare
Department of Electronics & Telecommunication Engineering
G H Raisoni College of Engineering
Nagpur, India
thakare_shrutin.et@ghrce.raisoni.net

Mayur Uike
Department of Electronics & Telecommunication Engineering
G H Raisoni College of Engineering
Nagpur, India
mayur.uike.mtechcom@ghrce.raisoni.net

Dr. Pankaj H. Chandankhede
Department of Electronics & Telecommunication Engineering
G H Raisoni College of Engineering
Nagpur, India
pankaj.chandankhede@raisoni.net

***Abstract*— The project's goal is to create an Internet of Things-based autonomous pet feeding system (IoT). Here, we're creating a feeder for pets and owners that may be used whenever a pet owner is away from home and unable to feed their animals normally. Pets will become obese if we give them free food. This device will also be used to train pets to eat on schedules by keeping track of their feeding patterns. The objective of the following project is to develop automatic pet feeding with the Internet of Things (IoT). Here we are developing a feeder for the pets and the owners that whenever a pet owner is outside the residence and unable to feed his or her pets normally. When we freely feed pets, it will cause obesity in pets. This machine will also be used to monitor the pet's eating habits to train the pets for scheduled meals.**

Keywords— IoT (Internet of Things), Dispenser

I. INTRODUCTION

Pet ownership is now viewed as an integral component of daily life for humans and their dogs. The aging population has grown along with the number of pets. A pet is considered a member of the family. The most popular pets among these are dogs and cats. The pet care company and industry have been growing year after year, and the necessity for items with cutting-edge comfort features has been crucial for assisting older citizens in caring for their dogs.

The suggested device aims to make pet owners' lives easier and to encourage them to grow their animals in a healthy way. The pet feeding for each meal needs to be carefully examined if you want to raise a healthy pet. The health of the pet will be directly impacted by delayed feeding. It may result in the pet's malnutrition as well as a number of disorders.

This proposed machine will therefore provide a solution for the aforementioned issue by automating the feeding process. It can perform the following tasks, including feeding a pet on schedule using a schedule, setting the food quantity, and adjusting the amount of food if the pet couldn't finish its last meal. Additionally, the device can determine how much food should be provided each day. To determine how much food should be consumed daily, basic information about the animal, such as breed and weight, can be entered. Since it is based on the Internet of Things, the device may be used to track how much food each pet should be fed.

II. PROBLEM STATEMENT

Many people find it challenging to feed pets sensibly and responsibly. When the proprietors lead a very busy personal life, the issue is very evident and significant. Owners always plan to keep the feeder stocked with food before departing, even if they are unable to feed their animals on time. The majority of the time, pets' improper diets result in health issues.

III. LITERATURE REVIEW

"Intelligent Food Dispenser (IFD)" - Hari N. Khatavkar, Rahul S. Kini, Suyash K. Pandey, Vaibhav V. Gijare, 2019 [1]. "The software that gives the food dispenser control over the gadget via a wi-fi module. The motor is started by the microcontroller FRDM KL25Z's programming. For distributing the food, there are two fundamental components.

"A Remote Pet Feeder Control System via MQTT Protocol" – by Wen-Chuan Wu, Ke-Chung Cheng, Pei-Yu Lin, 2018 [2]. "Currently, stationary devices make up the majority of commercial pet feeds. Vineeth S et al. can be managed by the owner. employing mobile devices, to remotely dispense food to the IR pet. There aren't many feeders with cameras that let owners watch their pets from home.

"Automatic Pet feeder" – by Aasavari Kank, Anjali Jakhariye, 2018 [3]. "For this system of pet feeders to function well, a variety of sensors are used. The Arduino will have a proximity sensor linked to it. The food is placed in a bowl once the pet is discovered in the vicinity of the feeder. Once the pet is close to the food bowl and the sensor picks up any motion away from the feeder, the food will be served.

"Pet feeding Dispenser using Arduino and GSM Technology" – by Smruthi Kumar, 2018 [4]. "The paper's main argument is that pet owners should be able to feed their animals while they are away by sending a message to the system using a mobile phone. This device uses GSM technology to receive texts from pet owners. Once the message is received, the servo motor and solenoid valve are turned on. This is what rotates the servo motor so that the food may be dispensed.

2023 International Conference on Emerging Smart Computing and Informatics (ESCI) | 978-1-6654-7524-2/23/$31.00 ©2023 IEEE | DOI: 10.1109/ESCI56872.2023.10100166

Authorized licensed use limited to: University of Wolverhampton. Downloaded on November 04,2025 at 15:52:45 UTC from IEEE Xplore. Restrictions apply.

"Automatic Pet Monitoring and Feeding System Using IoT" – by Subaashri S, Sowndarya M, Sowmiyalaxmi D K S, Sivassan S V, Rajasekaran C, 2017 [5]. "We can embed both hardware and software on the IoT platform. IoT is a reliable method of accessing data. To manage various devices in the home environment, a web service dependent on SOAP is employed. Many sensors are used to keep an eye on the actions of the pets, such as an IR sensor that detects the presence of food on the plate.

"Remote Controlled and GSM Based Automated Pet Feeder" – by Prashant Singh, Amit Kumar Sharma, PayalSood, Paramdeep Singh, 2015 [6]. "In the study, a dynamic model for the pet feeder that may be operated by an interactive remote controller is suggested. This design helps do away with the manual settings of earlier iterations of the pet feeder. In comparison to earlier designs, this one has tons of additional features.

IV. TOOLS REQUIRED

A. Hardware

1) Arduino Pro Mini
2) Light Sensor TEMT6000
3) Buck Converter
4) RFID MFRC522
5) RTC DS1307
6) Motor SG90

B. Software

1) ARDUINO IDE

C. WORKING

The TEMT6000 ambient light sensor from Spark fun will be used to determine whether it is day or night. To choose when and how frequently we release the food, it's critical to differentiate between the two. SIG, GND, and VCC are the 3 pins of a light sensor. By connecting this sensor's VCC and GND pins to the Arduino board's 5V and GND pins, respectively, and the SIG pin to an analog input, the sensor may be made to work. I've decided to use pin A0. The output SIG pin functions as a transistor, thus the voltage on the pin's output increases in proportion to the amount of light shining on the sensor. Due to the analog-to-digital converter's 10-bit resolution and the light sensor's connection to an analog pin, the maximum value is 1023. For instance, the value that this sensor read when exposed to the brightest light from my phone's flash was roughly 1023.

Here, the distance from the location where you mounted the distance sensor to the food container's bottom denotes the sensor's value. The distance sensor's measurement range is therefore 10-80 cm, and in order to read the distance precisely, it must be mounted 10 cm above the top of the food container. The time will be determined using the RTC DS1307 model. Setting real-time is the role of an RTC. The RTC circuit is composed of a crystal oscillator with a base frequency of 32.768 kHz. The concept is similar to how watches operate. a crystal vibration-based electronic oscillator function with a mechanical resonance that produces a precise frequency. By using this form of frequency, you may monitor dates and times from a computer. It is a valuable module since its battery provides continuity even when the system is off.

The cornerstone of this system will be Radio Frequency Identification. The RFID will analyze the value from the tag when your pet is at a specific distance from the feeder and then determine whether to continue feeding it or not. This system makes use of SPI communication, and through this SPI communication, specific values from the tags are stored in EEPROM memory. The information that has been gathered will still be kept in the memory of this system malfunctions (for instance, because of a power supply problem). One RFID tag is present, which will be affixed to a pet and determine whether the animal is yours or not. Only then will the process actually begin.

The SG90 servo motor will be used. It features a servo motor angle (0-180 degrees). Similar to this servo motor lock controlled by an angle, our project's locking mechanism will allow us to regulate how much food is released when the "lock" is opened or closed.

Here are some important points: 0 degrees: "Lock" is closed, preventing the release of food; 180 degrees: The "Lock" is opened, releasing all the food; You can select the amount of food you want to release between 0 and 180.

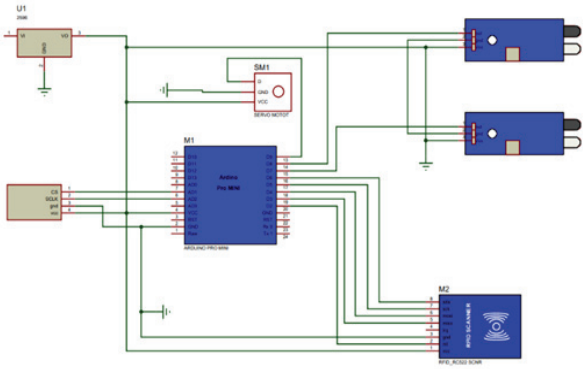

Fig. 1. Circuit Diagram

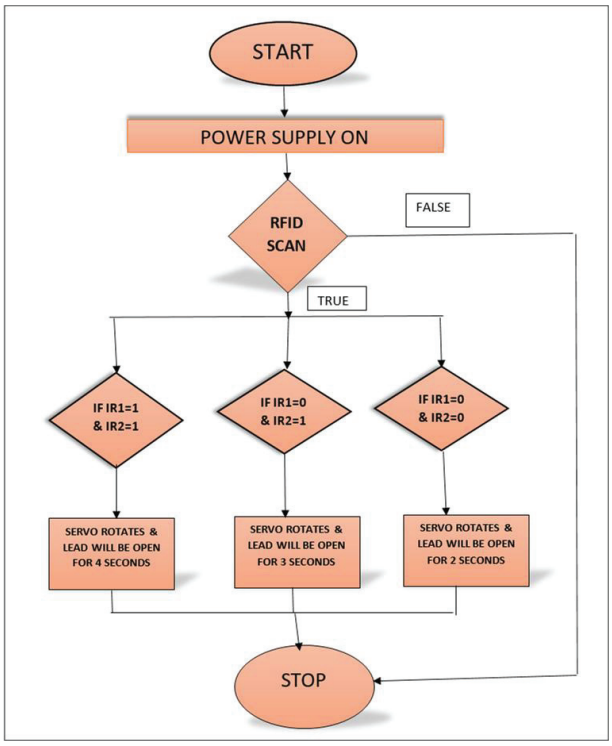

Fig. 2. Flowchart showing working of entire system

Authorized licensed use limited to: University of Wolverhampton. Downloaded on November 04,2025 at 15:52:45 UTC from IEEE Xplore. Restrictions apply.

As shown in Fig 1, when the power supply is turned on, a servo motor in the circuit turns on once. SIG, GND, and VCC are the 3 pins of the Light Sensor TEMT6000. It's really easy to connect this light sensor to the Arduino board: just connect the VCC pin to the board's 5V pin, the GND pin to the board's GND pin, and the SIG pin to an analog input (A0). A transistor is operating on the output SIG pin. Real-time Clock Pin Number 1 is connected to Real Time Clock Pin Number 7 of Arduino, while Real Time Clock Pin Number 2 is connected to Real Time Clock Pin Number 6 of Arduino, and Real Time Clock Ground is connected to Real Time Clock Ground of Arduino Pin Number 3. The RFID is set up to serve as the pet's key. The Arduino pins 8,7,6,5 are connected to 16, 17, 18, and 19. The Servo Motor is attached to Arduino pin number 13. This is also explained in terms of flowchart as shown in fig 2.

V. RESULTs

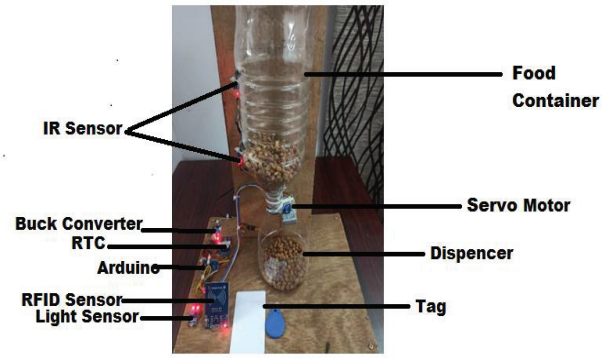

Fig. 3. Actual Implementation of entire system

As shown in figure 3, when we press the power supply button, the circuit's 12V current will begin to flow. Since our circuit only needs 5 volts of current, a buck converter, which is a step-down converter, will reduce the 12 volts of power to 5 volts for the circuit's appropriate operation.

This power will be provided to every element of the circuit to enable it to function. Here, the food will be poured in accordance with whether it is day or night as determined by the light sensor.

Initially, the RFID will read the value on the tag when your pet is close to the feeder and determine whether to dispense food or not. The servo motor will revolve and the food will begin to stream from the container to the dispenser for the pet to eat if the tag satisfies the code generated by the scanner. Additionally, the motor will be turned off and no food will be dispensed from the container if the code in the tag does not match the reader-generated code.

The two components will determine how much food is dispensed from the dispenser. Two infrared sensors are positioned in the food container at a specific distance from one another. This will guarantee that there is enough food in the container.

Hence the conditions are as follows:-

a. The servo motor will rotate and open the lead for 4 seconds if the food in the container is above both of the IR sensors (IR1 and IR2) as shown in figure 4

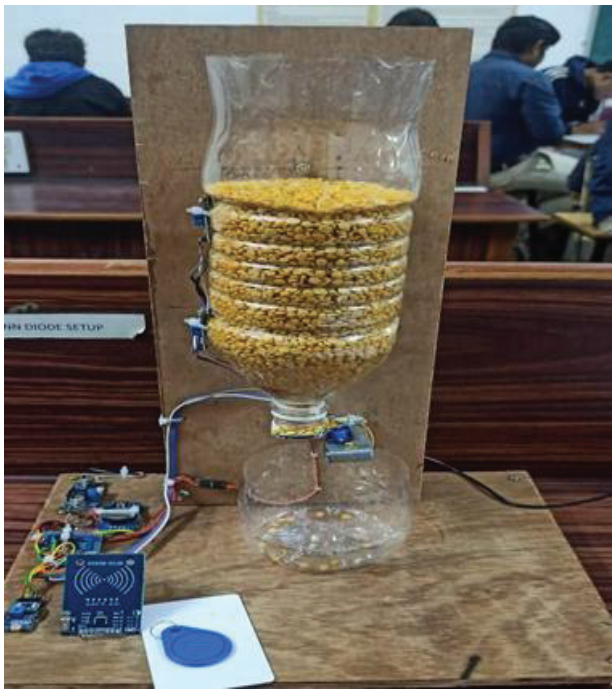

Fig. 4. Food Pour for 4 sec

b. If the food within the container is above one IR sensor but below the other (for example, above IR2 but below IR1), the servo will rotate and keep the lead open for just three seconds before closing it as shown in figure 5.
c. The servo will spin and hold the lead open for just two seconds before closing it if the food in the containers is well below both the send IR sensors (below IR2& IR1) as shown in figure 6.

Here, the RTC will be used to set the timing for poring the food, and it will open the lead in accordance with the given instructions. When the pet no longer wants to eat after the process, the circuit will stay in the closed state.

Fig. 5. Food Pour for 3 sec

Authorized licensed use limited to: University of Wolverhampton. Downloaded on November 04,2025 at 15:52:45 UTC from IEEE Xplore. Restrictions apply.

Fig. 6. Food Pour for 2 sec

VI. ADVANTAGES

- The majority of people concur that automatic dog feeders are simple to set up for people who are busy, allowing you to properly feed your dog without worrying about missing a meal.
- Prevents insufficient calorie intake and obesity - Owners occasionally fail to calculate the ideal calorie intake for their dog, which can occasionally result in obesity or insufficient calorie intake.
- Ideal for canines with sensitive health issues, such as Some dogs could have intestinal issues, diabetes, or other health issues. This chore is made easier by the automatic pet feeder, which gives the owner the ability to set aside sufficient portions for the dog's food.

VII. DISADVANTAGES

- They could occasionally break down. Since most automatic feeders rely on electronic devices, your pet might miss one or two meals as a result.
- Some machines aren't very sturdy; if you find a feeder model made of flimsy material, rest confident that the dog will eventually be able to get to it and will take additional food when it's not time to eat.
- Less time spent with your pet - Most pet owners concur that giving your dog food is a relationship that should not be replaced by a machine.

VII. CONCLUSION

Each pet owner has a different way of life. Some utilize their home as a place to feed their animals, while others may not have the space or time. This proposed pet-food feeding machine is the answer to the problem and makes it easier for pet owners to take care of their animals. In the event that pet owners choose to feed their animals on their own, employing this device will differ from the customary method because it allows for more exact feeding at the assigned time and allows for remote control, which the customary method could not support. Additionally, this technology is compatible with home automation technologies. It can also be developed to be more sophisticated so that it can work with more sensors. This pet feeder is essential since it will simplify the owner's life. The pet feeder will ensure that the pet is fed on time whether the owner is home or not.

REFERENCES

[1] Khatavkar, Hari N., Rahul S. Kini, Suyash K. Pandey, and Vaibhav V. Gijare. "Intelligent Food Dispenser (IFD)." published by IOSR Journal of Engineering (IOSRJEN) (2019): 65-70.

[2] Wu, Wen-Chuan, Ke-Chung Cheng, and Pei-Yu Lin. "A remote pet feeder control system via mqtt protocol." In 2018 IEEE International Conference on Applied System Invention (ICASI), pp. 487-489. IEEE, 2018.

[3] Kalbande, Vaishnavi, Gautami Tikale, Rahul Agrawal, Swati Sorte, Laxman Thakre, and Ganesh Khekare. "Design and Implementation of Motion Sensing Security System." In 2022 3rd International Conference on Electronics and Sustainable Communication Systems (ICESC), pp. 612-517. IEEE, 2022.

[4] Ahmad, Nornajidah Binti. "IOT SMART PET FEEDER." In FULL PAPERS CONGRESS E-BOOK, p. 1077.

[5] Liu, Ruini. "Automatic Pet Feeder based on Single Chip Microcomputer." In Journal of Physics: Conference Series, vol. 2037, no. 1, p. 012104. IOP Publishing, 2021.

[6] Kshirsagar, Pravin R., Hariprasath Manoharan, Fadi Al-Turjman, and Kailash Kumar Maheshwari. "Design and testing of automated smoke monitoring sensors in vehicles." IEEE Sensors Journal 22, no. 18 (2020): 17497-17504.

[7] Adriansyah, Andi, Muchd Arief Wibowo, and Eko Ihsanto. "Design of pet feeder using web server as internet of things application." In International conference on electrical engineering and informatics, pp. 151-156. 2016.

[8] Jajulwar, Kapil K., and A. Y. Deshmukh. "Design of SLAM based adaptive fuzzy tracking controller for autonomous navigation system." In 2016 10th International Conference on Intelligent Systems and Control (ISCO), pp. 1-5. IEEE, 2016.

[9] Mane, Sneha S., and Girish R. Talmale. "Raspberry-Pi based security system on IoT platform." In International Conference on Recent Trends in Engineering Science and Technology, vol. 5, no. 1, pp. 17-20. 2017.

[10] Khanapurkar, Milind, Rajat Kaushik, Rishi Mathur, Pravin Choudhari, Rajat Gupta, and Nidhi Dheer. "Design and Implementation of Cloud-Based Smart Parking Management System." In 2021 6th International Conference for Convergence in Technology (I2CT), pp. 1-4. IEEE, 2021.

[11] Koley, Soumallya, Sneha Srimani, Debanjana Nandy, Pratik Pal, Samriddha Biswas, and Indranath Sarkar. "Smart Pet Feeder." In Journal of Physics: Conference Series, vol. 1797, no. 1, p. 012018. IOP Publishing, 2021.

[12] Kolhe, Pranita, Kamlesh Kalbande, and Atul Deshmukh. "Internet of Thing and Machine Learning Approach for Agricultural Application: A Review." In 2022 10th International Conference on Emerging Trends in Engineering and Technology-Signal and Information Processing (ICETET-SIP-22), pp. 1-6. IEEE, 2022.

[13] Basheshankar, Aniket, Aniket Lande, Anuj Nandeshwar, Arnob Sarkar, Ashwin Udapure, and Pankaj H. Chandankhede. "Assistive Cane for Visually Impaired People." In 2022 10th International Conference on Emerging Trends in Engineering and Technology-Signal and Information Processing (ICETET-SIP-22), pp. 1-5. IEEE, 2022.

[14] Lee, Jung-Jae, and Dong-Hoi Kim. "Implementation of a Smart IoT System with Automatic Pet Feeder." Journal of Digital Contents Society 22, no. 2 (2021): 209-214.

[15] Pendhari, Darshan P., and K. K. Jajulwar. "Design of mobile robot for Indoor Monitoring System using SLAM Technique." International Journal of Computer Science & Applications (TIJCSA) 1, no. 2 (2012).

[16] Anggraini, Nenny, Dzul Fadli Rahman, Luh Kesuma Wardhani, and Nashrul Hakiem. "Mobile-based monitoring system for an automatic

Authorized licensed use limited to: University of Wolverhampton. Downloaded on November 04,2025 at 15:52:45 UTC from IEEE Xplore. Restrictions apply.

cat feeder using Raspberry Pi." TELKOMNIKA (Telecommunication Computing Electronics and Control) 18, no. 2 (2020): 1038-1046.

[17] Kolhe, Mukul, Roshan Paturkar, Umesh Sahu, Sofia Pillai, and Abhijit Titarmare. "Analytic for Temperature and Humidity–Cloud based Forecasting and Dashboard." In 2020 4th International Conference on Intelligent Computing and Control Systems (ICICCS), pp. 674-679. IEEE, 2020.

[18] Sorte, Swati, Wani Patil, Sonali Joshi, and Payal Ghutke. "Vision system check for authentication of quality of industry automation for detection of system parts using raspberry pi." In Journal of Physics: Conference Series, vol. 1913, no. 1, p. 012134. IOP Publishing, 2021.

[19] Hasim, Hidayatul Nur Binti, Mritha Ramalingam, Ferda Ernawan, and R. Puviarasi. "Developing fish feeder system using Raspberry Pi." In 2017 Third International Conference on Advances in Electrical, Electronics, Information, Communication and Bio-Informatics (AEEICB), pp. 246-250. IEEE, 2017.

[20] Manoharan, Hariprasath, Yuvaraja Teekaraman, Pravin R. Kshirsagar, Shanmugam Sundaramurthy, and Abirami Manoharan. "Examining the effect of aquaculture using sensor- based technology with machine learning algorithm." Aquaculture Research 51, no. 11 (2020): 4748-4758.

[21] Kumari, Kriti, Pankaj H. Chandankhede, and Abhijit S. Titarmare. "Design of Human Activity Recognition System Using Body Sensor Networks." In 2021 6th International Conference on Communication and Electronics Systems (ICCES), pp. 1011-1016. IEEE, 2021.

[22] Ashtankar, Pravin P., Sanjay S. Dorle, Megha B. Chakole, and Avinash G. Keskar. "Approach to avoid collision between two vehicles in intelligent transportation system." In 2009 Second International Conference on Emerging Trends in Engineering & Technology, pp. 598-603. IEEE, 2009.

Authorized licensed use limited to: University of Wolverhampton. Downloaded on November 04,2025 at 15:52:45 UTC from IEEE Xplore. Restrictions apply.